CD80 1" Aluminum Horizontal Blinds

Our Model CD80 aluminum blind provides superior light control with 20mm tape spacing and heavy-duty 1" x .008" slats. The attractive design of the beveled steel headrail eliminates the need for a separate valance system.

KEY FEATURES

- 1 3/8" x 1 3/8" x .024" Headrail
- Heat-treated, spring-tempered aluminum slats
- Clutch tilter prevents over-rotation of slats
- Closed oval steel bottom rail provides optimal strength to prevent bowing
- Slats contain 95% recycled aluminum content and are GREENGUARD Indoor Air Quality Certified®
- Cord stop to single cord pull
- Lifetime Guarantee

Children & Schools GREENGUARD® Indoor Air Quality Certified

125 Bright White	885 Flex White	110 Gloss White	001 Glacier White	127 Linen Flirt	981 Platinum Gray	974 Pearl
002 Alabaster	830 Almond	173 Eggshell	973 Antique White	268 Crème de la Crème	269 Chenille	270 Linen
350 Vanilla	205 Fawn	795 Surf	275 Blossom Mist	186 Beige	180 Dove Gray	820 Umber
064 Bronze	018 Satin Silver	748 Shadow Gray	318 Silver Cloud	276 Silverado	405 Gray Flannel	983 Graphite
048 Black	065 Brushed Aluminum	190 Bright Aluminum	413 Hunter Green	262 Steel Wind Brushed	Perforated Slat*	

* Note: when ordering, please specify color #, color name

CONSS09CD80

HunterDouglasContract

WINDOW COVERINGS

© Copyright Hunter Douglas Contract 2009
® Hunter Douglas and its product names are registered trademarks
® The GREENGUARD INDOOR AIR QUALITY CERTIFIED mark is a registered certification mark used under license through the GREENGUARD Environmental Institute.

CD80 1" Aluminum Horizontal Blinds

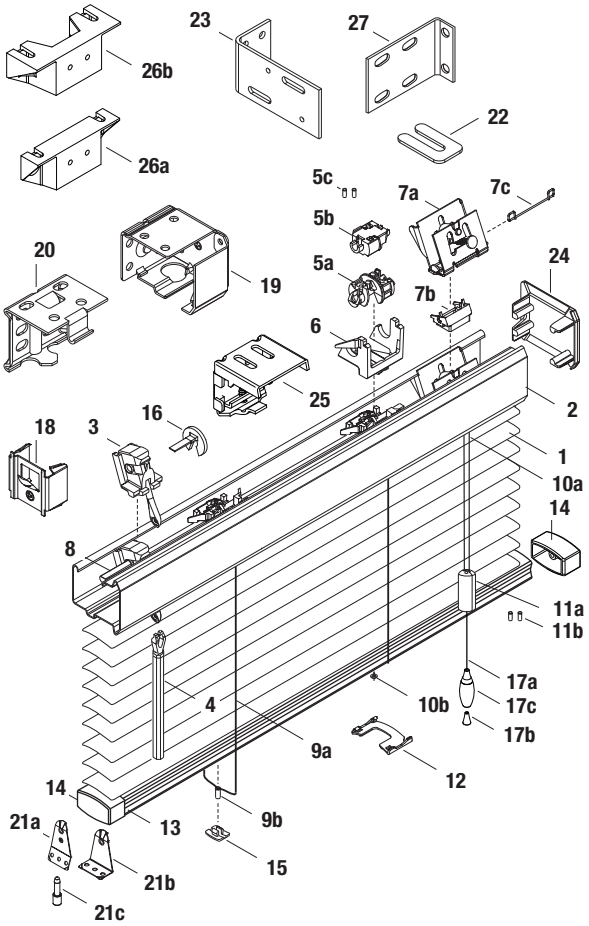

STANDARD COMPONENTS:

1. Slat
2. Headrail
3. Wand Tilter
4. Wand

5a. Tape Roll/Slot Type
5b. Tape Roll/Bead Type
5c. X-Tape Locator – Grommet
6. Tape Roll Support
7a. Cordlock
7b. Cordlock Adapter
7c. Lift Cord Separator
8. Tilt Rod
9a. Cable Tape Ladder
9b. Cable Tape Grommet
10a. Lift Cord
10b. Lift Cord Grommet
11a. Cord Stop
11b. Safety Tassel Grommet
12. Tape Spacer
13. Bottom Rail
14. Bottom Rail End Cap
15. Tape Button
16. Tilter Lock
17a. Lift Cord
17b. Conical Tassel Washer
17c. Tassel

Box Bracket Mounting:

18. Headrail End Lock
19. Box Installation Bracket
20. Intermediate Support Bracket

OPTIONAL COMPONENTS:

21a. Hold-Down Bracket (Jamb)
21b. Hold-Down Bracket (Sill)
21c. Hold-Down Pin
22. Bracket Shim

Box Bracket Mounting:

23. Extension Bracket

Gripper Bracket Mounting:

24. Headrail End Cap
25. Universal Gripper Bracket

26a. 1/2" Spacer (option)
26b. 7/8" Spacer (option)
27. End Mount Bracket (option)

PRODUCT SPECIFICATIONS

PART 2 – PRODUCTS

2.01 ACCEPTABLE MANUFACTURER

A. Hunter Douglas Contract/ 12250 Parkway Centre Dr. / Poway, CA 92064/ Phone: 800-727-8953 Fax: 800-205-9819/ Website: www.hunterdouglascontract.com, or architect approved equivalent. Contact the following for project assistance and dealer referral @ 800-964-2580: (Mideast/Midwest) Keith Burgess ext. #827311, (Southern/Central) Christopher Hagen ext. #827312, (Western/Mountain/Upper Midwest) David Cover ext. #827313, (Northeast) Patrick LeClair ext. #827314.

B. Product substitutions must be approved by architect minimum of 30 days prior to close of bid.

2.02 1" MINI HORIZONTAL ALUMINUM BLINDS

A. PRODUCT: Hunter Douglas "CD80 1" Aluminum Blind"

B. MATERIALS:

1. **SLATS:** 1" wide x .008" thick, heat-treated and spring tempered (except 5000 series alloy on metallized finishes) aluminum alloy 6011 with eased corners and manufacturing burrs removed. Product to have a minimum of 95% pre-consumer recycled content. Furnish not less than nominal 15.2 slats per foot to ensure tight closure and light control. Finish with manufacturer's standard baked-on finish in colors selected by architect from manufacturer's available contract colors utilizing Dust Shield™ finish to inhibit dust build-up for easier maintenance.
2. **SLAT SUPPORT:** Braided ladders of 100% polyester yarn color compatible with slats and spacing of ladder no more than 20mm.
3. **HEADRAIL:** U-shaped profile with rolled edges, measuring 1 3/8" x 1 3/8" x .024" constructed of corrosion resistant steel and providing a sleek beveled edge valance-free design. Internally fit with components required for specified performance and designed for smooth, quiet, trouble-free operation. Headrail finish to be standard baked-on polyester and to match slats. Ends fitted with .024" steel end lock with adjustable tab for centering blinds.
4. **BOTTOM RAIL:** Steel, with corrosion-resistant finish formed with double-lock seam into closed oval shape for optimum beam and torsional strength. Ends fitted with color-coordinated engineered polymer caps. Color-coordinated engineered polymer tape buttons secure the ladder and cord. Bottom Rail finish to be standard baked-on polyester color coordinated to slats.
5. **LIFTING MECHANISM:** Crashproof steel cordlocks with corrosion-resistant finish, two-ply polyester cord filler in braided polyester jacket lift cords, cord equalizers, cordlock adapter, and Cord Stop/Single Pull Cord. Located on either side of individual blind unit as per architect's request.
6. **TILTING MECHANISM:** Permanently lubricated die-cast worm and gear type tilter gear mechanism in fully enclosed housing with clutch action to protect ladder tapes from over rotation of the solid steel, corrosion resistant tilt rod.
7. **TILT CONTROL WAND:** Tubular shaped 7/16" diameter extruded clear plastic, ribbed for positive grip and detachable without tools. Located on either side of individual blind unit as per architect's request.
8. **MOUNTING HARDWARE:** Manufacturer's standard .042" steel box brackets with baked-on polyester finish to match headrail with additional support brackets for blinds over 60" wide.
9. **ADDITIONAL AVAILABLE OPTIONS:** Limited Tilt, Ring Pulls, Color Striping, 2 or 3 Blinds on 1 Headrail, Hidden Brackets, Side Channels (limited colors available), Hold Down Brackets, Cutouts, Perforated Slat.

2.03 FABRICATION

A. Blind measurements shall be accurate to within + 1/8" or as recommended in writing by manufacturer.

2.04 FINISHES

A. SLAT finish selection from the following: 001 Glacier White, 002 Alabaster, 018 Satin Silver, 048 Black, 064 Bronze, 065 Brushed Aluminum, 110 Gloss White, 125 Bright White, 127 Linen Flirt, 173 Eggshell, 180 Dove Gray, 186 Beige, 190 Bright Aluminum, 205 Fawn, 262 Steel Wind Brushed, 268 Crème de la Crème, 269 Chenille, 270 Linen, 275 Blossom Mist, 276 Silverado, 318 Silver Cloud, 350 Vanilla, 405 Gray Flannel, 413 Hunter Green, 748 Shadow Gray, 795 Surf, 820 Umber, 830 Almond, 885 Flex White, 973 Antique White, 974 Pearl, 981 Platinum Gray, 983 Graphite.

B. SLAT SUPPORT braided ladders shall be color coordinated with slat